How to Get the Best Wheelchair for Your Needs

Rosemarie Cooper, MPT/ATP

Director
University of Pittsburgh Medical Center (UPMC)
Center for Assistive Technology (CAT)

UPMC
LIFE CHANGING MEDICINE

Assistant Professor
University of Pittsburgh
Department of Rehabilitation Science & Technology

Alexandra Bennewith, MPA

Vice President, Government Relations
United Spinal Association

United Spinal Association

Alexandra Bennewith, VP Government Relations

United Spinal Association

United Spinal Association

Rosemarie Cooper, MPT

Director, University of Pittsburgh Medical Center

Center for Assistive Technology

United Spinal Association

United Spinal Association

United Spinal Association

UPMC Assistive Technology Service Delivery

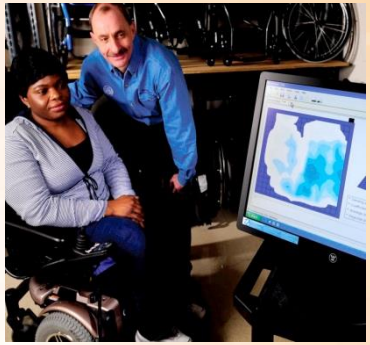

United Spinal Association

Who We Are

Founded in 1946, United Spinal Association is dedicated to enhancing the quality of life of all people living with spinal cord injuries and disorders (SCI/D), including veterans, and providing support and information to loved ones, care providers and professionals. United Spinal has over 40,000 members and represents over one million individuals with spinal cord injuries and disorders with over 50 chapters, over 100 rehabilitation hospital members and close to 200 support groups nationwide. United Spinal is also a VA-recognized veterans service organization (VSO) serving veterans with disabilities of all kinds.

We believe no person should be excluded from opportunity on the basis of their disability. Our goal is to provide people living with SCI/D programs and services that maximize their independence and enable them to remain active in their communities.

Our Core Beliefs:

Access to Quality Affordable Healthcare
Employment Opportunities, Self Sufficiency and Independent Living
Consumer Directed Quality Health Care and Community Integration
Preservation of Social Security Benefits
Protecting the Rights of People with Disabilities

VetsFirst Core Principles:

Community Integration and Independence
Timely Access to Quality VA Health Care and Benefits
Rights of Veterans with Disabilities

United Spinal Association

Programs & Services

- Accessibility Services
- Advocacy/Policy
  - Roll on Capitol Hill
  - VetsFirst Program
  - Grassroots
- Affiliate Service Providers/Spinal Network
  - New Beginning Backpack Program
- Medical and Scientific Advisory Committee
- New Mobility Magazine
- United Spinal Resource Center

https://www.unitedspinal.org

June 11-14, 2017

- Roll on Capitol Hill is United Spinal's annual legislative advocacy event that addresses issues that impact the health, independence and quality of life of individuals living with spinal cord injuries and disorders.
- 150 advocates from 35 states —to advocating for policies that improve the quality of life for people with spinal cord injuries and disorders.
- Issues discussed include:
  - Complex Rehab Technology/Medical Supplies
  - Healthcare reform
  - Community Integration
  - Transportation

THANK YOU TO ALL OUR SPONSORS!

https://www.unitedspinal.org/events/roll-on-capitol-hill/

UPMC Center For Assistive Technology

Services

- wheelchair seating and positioning
- personal mobility systems
- augmentative communication devices (speech output devices)
- audiology services, aural rehabilitation, assistive listening and alerting devices, and hearing aid dispensing
- specialized computer equipment and software, such as adaptive keyboards, monitors, and voice programs
- ergonomic workstation design
- environmental control units for work, school, or home
- recreational devices, such as cycles and skis
- consultation on vehicle modifications and related adaptive equipment
- adaptive driving evaluation and training
- environmental accessibility and recommendations for home modifications

UPMC Center For Assistive Technology

The Team

- Physiatrist (physician)
- Occupational or Physical Therapist (ATP Credential
- Rehabilitation Engineer (ATP Credentialed)
- Speech Pathologist
- Audiologist
- OVR Counselor
- Assistive Technology Supplier (ATP Credentialed)
- Administration

The chief team member is ….The client

Quality of life is specific to and defined by each person and/or family receiving services. Skills and supports to enhance quality of life will be determined and their effectiveness reported by the clients receiving services.

United Spinal Association

Wheelchair Service Delivery Process

(Good Practices)

- Screening
- In-depth evaluation
- Final specifications
- Documentation
- Fittings
- Delivery
- Training
- Follow-up

"Complex Rehab Technology" Wheelchairs Differ from Standard Wheelchairs

Complex Rehab wheelchairs are individually configured to meet the specific needs of people with permanent disabilities and are vital to a SMALL but CRITICAL segment of Medicare wheelchair users who rely on these specialized wheelchairs for their health and independence.

Complex Manual WCs
- Intended for long-term use
- High Adjustability
- Provides Positioning
- Accommodates Orthopedic Issues
- Provides Pressure Management

Standard Manual WCs
- Intended for short-term use
- Minimal to Zero Adjustability
- NO Positioning
- NO Orthopedic Accommodations
- Provides NO Pressure Management

Complex Power WCs
- Intended for Perm./Progressive Diagnoses
- Advanced Electronics and Controls
- Provides Positioning
- Accommodates Orthopedic Issues
- Provides Pressure Management
- Offers Ventilator Accommodation

Standard Power WCs
- Intended for Ambulatory Limitations
- Basic Joystick Drive ONLY
- NO Positioning
- NO Orthopedic Accommodations
- Provides NO Pressure Management
- NO Ventilator Accommodation

For more information about Complex Rehab Technology (CRT) visit www.ncart.us.

Take Action

https://www.unitedspinal.org/action-center/

- ***Protect Access to Complex Rehab Technology***
- **Co-Sponsor and Pass H.R.1361/S.486 to Protect Access to Complex Rehab Manual and Power Wheelchair Accessories**
- Complex rehab wheelchairs and essential components are used by a segment of wheelchair users with significant disabilities such as ALS, cerebral palsy, multiple sclerosis, muscular dystrophy, spinal cord injury and traumatic brain injury. For these wheelchair users, the chair is not complete, usable or even safe without the appropriate complex rehab technology components included.

- **Complex rehab wheelchair components need additional adjustment and fitting** and rely on higher-credentialed technicians for those services.
- Medicare is inappropriately using pricing information obtained through its competitive bidding program for standard wheelchair components and applying that pricing to complex rehab wheelchair accessories that were not part of the competitive bidding program.
- This policy change is **in violation of Congressional intent** when it passed *Medicare Improvements for Patients and Providers Act of 2008 (MIPPA)* which excluded complex rehab power wheelchairs and components from the competitive bidding program.
- The **negative consequences will spread to include other people with disabilities who are covered by Medicaid and private health insurance plans** since many insurance payers follow Medicare policy.

  - https://www.unitedspinal.org/essential-crt-components/

Take Action, Take 2

https://www.unitedspinal.org/separate-medicare-crt/

- **Co-Sponsor and Pass H.R.750 - Ensuring Access to Quality Complex Rehabilitation Technology Act**
- Complex rehab technology (CRT) refers to products and services, including medically necessary individually configured manual and power wheelchair systems, adaptive seating systems, alternative positioning systems, and other mobility devices that require evaluation, fitting, design, adjustment and programming. CRT is designed to meet the specific and unique medical and functional needs of an individual with primary diagnoses resulting from a congenital disorder, progressive or degenerative neuromuscular disease, or from an injury or trauma.

Take Action, Take 2

- CRT is used by individuals with disabilities and chronic conditions who have **medical conditions significantly different from those experienced by the traditional elderly population in Medicare**. This population tends to qualify for Medicare based on their disability and not their age including individuals diagnosed with cerebral palsy, muscular dystrophy, multiple sclerosis, spinal cord injury, amyotrophic lateral sclerosis (Lou Gehrig's disease), and spina bifida.
- **CRT requires a broader range of services and specialized personnel** than those required for standard DME.
- This bill requires a **home evaluation of the individual's functional mobility needs** to include a technology assessment, measuring, fitting, simulations and trials, a mixing and matching of products from different manufacturers, significant training and education, refitting and ongoing additional modifications.
- With this bill, **additional and more rigorous quality standards will be in place with which CRT companies must comply** including the fact that suppliers must be accredited by an independent accreditation organization demonstrating that they comply with the enhanced quality standards.
- Under this bill, **CRT would be covered for people transitioning from skilled nursing facilities to the home** and community. This bill **exempts CRT products from Medicare's 'in-the-home'** rule which covers mobility devices only if used inside a person's home. The exemption rightly allows people to use their mobility devices to remain active members of their community.

Problems with funding?

- Let's discuss the problems with funding and how best to obtain the wheelchair that best meets your needs.
  - Restrictions on funding for customized features, both in and outside the home.

Assessment

- Simulation
- Clinical trials
- Discussion of options
- Review of goals
- Compromises
- Home trials
  - Include home and workplace visits and try equipment in clients environments
- Consensus and final decisions

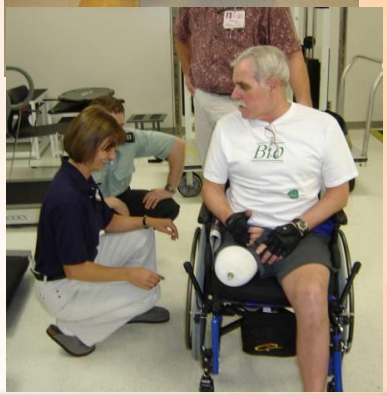

Funding

- Never Bias Assessment Process
  - Assess needs
  - Deal with Funding
- Evidence Based Practice
- Appeal of Denials

Fitting/Training/Delivery

- Final delivery team members:
  - RTS/ATP-delivery of recommended equipment
  - Therapist- verification of final fit and education
  - Rehab Engineer- fine tuning, custom modification, education on operation
  - Assure the provision of follow-up services
  - End –User and Family/Caregivers.- final approval and acceptance

Seat Elevator

- PROS:
  - Accommodate limited use of upper extremities
  - ADL's
    - Reach
    - Transfers
  - Social interaction

- CONS:
  - Viewed by some payers as not medically necessary

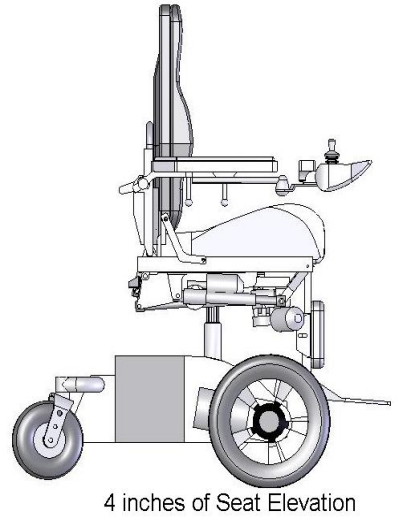

A seat elevator is appropriate as s/he will be able to incorporate its features into all of his/her ADLs and IADLs as through use of a seat elevator s/he will be able **to change heights to facilitate transfers**, and s/he will be at less risk for falls and injury during transfers. For example: medical appointment and examination as s/he can level out the transfer height on exam tables. The seat elevator will enable XXX **to independently change his/her seat height levels at tables, counters, desks, work surfaces and therefore s/he will be able to continue to independently participate in everyday domestic and community activities.** The seat elevator will allow him/her to spent time on his/her own as s/he can enhance activities such as reach up to the thermostat for temperature control, reach the kitchen and microwave to prepare his/her own small meals, as well for security by allowing to check doors and windows. A seat elevator will allow XXX to position him/herself at eye level with others, adding an important psychological benefit as it facilitates communication.

His / Her need for this seat function is also consistent with the **Rehabilitation Engineering & Assistive Technology Society of North America's (RESNA) Position Papers on Powered Seat Functions and/or Seat Elevating Devices**.

Reach - Justifications

- Important factor in basic and instrumental ADL's, including health and safety
  - Medicine cabinet
  - Thermostat
  - Light switch
  - Fire alarm/extinguisher
  - Meal Preparation
  - Housecleaning
  - Finances (ATM)
  - Shopping
  - Laundry

Power seat to floor- pediatric only

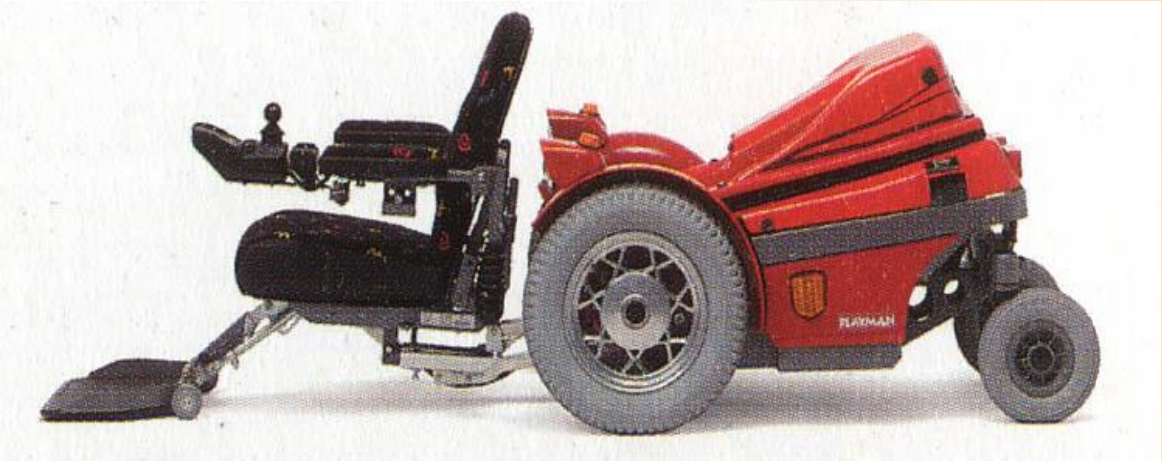

- Interaction/play with peers on the floor
- Unable to transfer independently unless seating system is low to the floor

Manual wheelchairs: K0004 vs K0005:
Part one

We just received notification to provide John E Doe with an ultralight manual (K0005) wheelchair has been rendered "not medically necessary," based on Dr. YYY assessment that Mr. Doe *" has so much upper extremity strength that he is able to walk with bilateral canes . There is no documentation of UE ortho or neuro limitations. The submitted information did not provide any information that the member cannot propel a light weight manual (K0004) wheelchair."*

We would like to take the opportunity to draw the attention of your clinical staff to the ***Clinical Practice Guideline, Preservation of Upper Limb Function Following SCI. Published by Paralyzed Veterans of America on behalf of the Consortium for Spinal Cord Medicine.*** **(www.pva.org).** The CPG focuses on the use, stress and strain of upper limb function inherent to those with spinal cord injury (SCI) wishing to maintain mobility using a wheelchair or similar assistive technology.

Since manual wheelchair propulsion is like "walking on your hands" and therefore not a natural phenomenon, people who propel manual wheelchairs are known to have very high incidences of upper extremity repetitive strain injuries that significantly impair function and may require costly medical interventions. Research indicates that reducing the weight of the wheelchair as well as proper fit and alignment of the rear axle position can significantly reduce the potential for these injuries.

The guideline clearly states that only ultralight manual wheelchairs (K0005) allow for adjustable axle position, adjusting camber and seat angle needed to fit the user and to have a positive impact on propulsion mechanics to preserve the upper extremities and reduce the risk of repetitive strain injuries (RSI) associated with wheelchair propulsion.

To answer your question why John Doe cannot function with a light weight wheelchair? A light weight wheelchair (K0004) is designed with only minimal adjustments and does not have adjustable axle components. Therefore, the use of a light weight manual wheelchair has negative impact on propulsion mechanics that will expose the user to a high risk for RSI, pain and dysfunction in both upper extremities that may lead to premature power mobility use. This is especially relevant for continual, energetic and long term manual wheelchair users. The high prevalence of BUE repetitive stress injuries that result in future surgeries have been documented.

Manual wheelchairs: K0004 vs K0005:
Part two

We just received notification that our first level appeal requesting reconsideration of the denial to provide John E Doe with an ultralight manual wheelchair is still rendered "not medically necessary"….

First, we would like to point out that the standard of care for a patient with Mr. Doe's condition and functional goals is an ultralight manual wheelchair. We would like to take the opportunity to clarify that our intent in the first appeal was not to question nor to rule out that Mr. Doe cannot propel a manual light weight wheelchair, because we agree that Mr. Doe has normal upper limb strength and he is physically able to self-propel a manual light weight chair. However, all persons who can propel an ultralight manual wheelchair can propel lightweight wheelchairs for a short period of time on an evaluation.

We wish to draw your attention to our just recently published findings related to the "evaluation of lightweight wheelchair using ANSI/RESNA testing standards" that concludes that the *"durability results from ultralight weight wheelchair proves that they can pass the ANSI/RESNA standard test, but the lightweight category , unfortunately, is lagging behind" (***JRRD Volume 50, Number 10, 2013 *"Evaluation of lightweight wheelchairs using ANSI/RESNA testing standards"* Benjamin Gebrosky et.al).** The significance of the finding as it relates to our appeal is that ultralight manual wheelchair actually cost less to operate**.** Ultralights were found **to last 4.8 times longer and were 2.3 times less expensive to operate than light weight chairs**. It is our understanding, that your insurance will reimburse between **$1,193 and $1,274 for a light weight manual wheelchair and between $1,786 - $1846 for the recommended Q7 ultralightweight manual wheelchair.** Requiring an active and independent manual wheelchair user to propel an light manual wheelchair for 5 years, (which is the estimated 5 year life expectancy according to ANSI/RESNA standards) the purchase/replacement cost to the health plan can be demonstrated follows:

1) 2X (replacement chair) x $1,200= $2,400 (best case scenario)
2) 3X (replacement chair) x $1,200= **$3,600** (expected case scenario)
3) 4X (replacement chair) x $1,200= $4,800 (worst case scenario)

Although the initial cost of $ 1846 for recommended Q7 ultralight is higher, the expense is more than made up in durability as lightweight chairs are of poor quality and less durable than ultralights, would have to replaced more frequently, and should not be recommended to active and independent manual wheelchair users.

THANK YOU

Rosemarie Cooper
CooperR@upmc.edu (412) 647-1315

Alexandra Bennewith
abennewith@unitedspinal.org (202) 556-2076

United Spinal Association